Please check the examination details below before entering your candidate information

Candidate surname	Other names

Pearson Edexcel International Advanced Level

Centre Number | Candidate Number

Wednesday 8 January 2020

Morning (Time: 2 hours 30 minutes) | Paper Reference **WMA01/01**

Mathematics

International Advanced Subsidiary/Advanced Level
Core Mathematics C12

You must have:
Mathematical Formulae and Statistical Tables (Blue), calculator

Total Marks

Candidates may use any calculator permitted by Pearson regulations. Calculators must not have the facility for symbolic algebra manipulation, differentiation and integration, or have retrievable mathematical formulae stored in them.

Instructions

- Use **black** ink or ball-point pen.
- If pencil is used for diagrams/sketches/graphs it must be dark (HB or B).
- **Fill in the boxes** at the top of this page with your name, centre number and candidate number.
- Answer **all** questions and ensure that your answers to parts of questions are clearly labelled.
- Answer the questions in the spaces provided – *there may be more space than you need.*
- You should show sufficient working to make your methods clear. Answers without working may not gain full credit.
- Inexact answers should be given to three significant figures unless otherwise stated.

Information

- A booklet 'Mathematical Formulae and Statistical Tables' is provided.
- There are 16 questions in this question paper. The total mark for this paper is 125.
- The marks for **each** question are shown in brackets – *use this as a guide as to how much time to spend on each question.*

Advice

- Read each question carefully before you start to answer it.
- Try to answer every question.
- Check your answers if you have time at the end.
- If you change your mind about an answer, cross it out and put your new answer and any working underneath.

Turn over ▶

P61130A

©2020 Pearson Education Ltd.

1/1/1/1/

P 6 1 1 3 0 A 0 1 4 8

Pearson

Leave blank

1. **In this question you must show detailed reasoning.**

Solutions relying on calculator technology are not acceptable.

(a) Write $\dfrac{6}{\sqrt{5}-\sqrt{2}}$ in the form $a\sqrt{5}+b\sqrt{2}$, where a and b are integers to be found.

(2)

(b) Hence, or otherwise, solve the equation

$$\sqrt{5}x = \sqrt{2}x + 18\sqrt{5}$$

giving your answer in its simplest form.

(3)

DO NOT WRITE IN THIS AREA
DO NOT WRITE IN THIS AREA
DO NOT WRITE IN THIS AREA

Leave blank

Question 1 continued

Q1

(Total 5 marks)

DO NOT WRITE IN THIS AREA
DO NOT WRITE IN THIS AREA
DO NOT WRITE IN THIS AREA

Leave blank

2. The curve C has equation

$$y = 2x^2 - \frac{1}{4x} - 3 \qquad x > 0$$

(a) Find $\frac{dy}{dx}$ giving the answer in its simplest form.

(3)

The point $P\left(\frac{1}{2}, -3\right)$ lies on C.

(b) Find the equation of the tangent to C at the point P. Write your answer in the form $y = mx + c$, where m and c are constants to be found.

(3)

DO NOT WRITE IN THIS AREA
DO NOT WRITE IN THIS AREA
DO NOT WRITE IN THIS AREA

Leave blank

Question 2 continued

Q2

(Total 6 marks)

DO NOT WRITE IN THIS AREA
DO NOT WRITE IN THIS AREA
DO NOT WRITE IN THIS AREA

Leave blank

3. Find the set of values of x for which

(a) $4(x - 3) < 2x - 7$

(2)

(b) $2x^2 - 5x \leqslant 63$

(3)

(c) $4(x - 3) < 2x - 7$ and $2x^2 - 5x \leqslant 63$

(2)

DO NOT WRITE IN THIS AREA
DO NOT WRITE IN THIS AREA
DO NOT WRITE IN THIS AREA

Leave blank

Question 3 continued

Q3

(Total 7 marks)

DO NOT WRITE IN THIS AREA

DO NOT WRITE IN THIS AREA

DO NOT WRITE IN THIS AREA

Leave blank

4. Find

$$\int \frac{4\sqrt{x} - 3}{2x^2}\,\mathrm{d}x \qquad x > 0$$

writing the answer in its simplest form.

(5)

DO NOT WRITE IN THIS AREA DO NOT WRITE IN THIS AREA DO NOT WRITE IN THIS AREA

Leave blank

Question 4 continued

Q4

(Total 5 marks)

DO NOT WRITE IN THIS AREA
DO NOT WRITE IN THIS AREA
DO NOT WRITE IN THIS AREA

Leave blank

5. (i) Solve

$$4^{y} = 10^{3000}$$

giving your answer to the nearest whole number.

(2)

(ii) Solve

$$\log_4(x + 4) - 2\log_4(2 - x) = \frac{1}{2}$$

(5)

DO NOT WRITE IN THIS AREA
DO NOT WRITE IN THIS AREA
DO NOT WRITE IN THIS AREA

Leave blank

Question 5 continued

Q5

(Total 7 marks)

DO NOT WRITE IN THIS AREA
DO NOT WRITE IN THIS AREA
DO NOT WRITE IN THIS AREA

Leave blank

6.

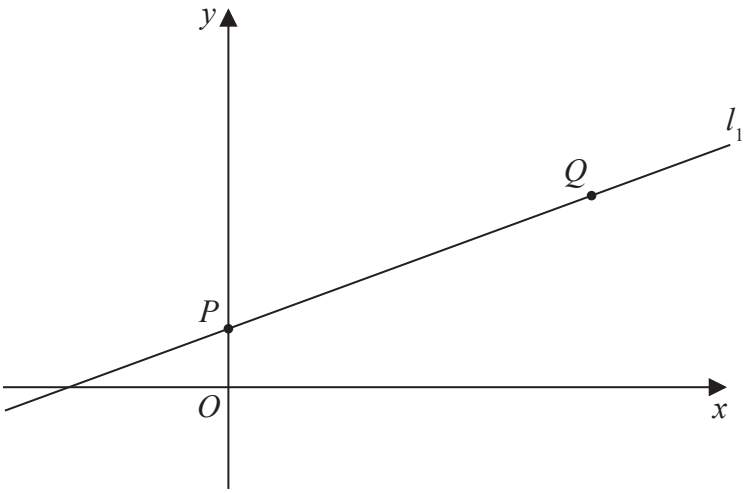

Figure 1

The line l_1, shown in Figure 1, has equation $2y = 3x + 8$

The line l_1 intersects the y-axis at the point P and passes through the point Q with x coordinate 6

(a) Find (i) the coordinates of P,

(ii) the coordinates of Q.

(2)

The line l_2 is perpendicular to l_1 and passes through the point Q.

(b) Find an equation for l_2, writing the answer in the form $ax + by + c = 0$, where a, b and c are integers to be found.

(4)

The line l_2 cuts the x-axis at the point R.

(c) Find the area of quadrilateral $OPQR$, making your method clear.

(3)

DO NOT WRITE IN THIS AREA
DO NOT WRITE IN THIS AREA
DO NOT WRITE IN THIS AREA

Leave blank

Question 6 continued

DO NOT WRITE IN THIS AREA
DO NOT WRITE IN THIS AREA
DO NOT WRITE IN THIS AREA

Leave blank

Question 6 continued

DO NOT WRITE IN THIS AREA
DO NOT WRITE IN THIS AREA
DO NOT WRITE IN THIS AREA

Leave blank

Question 6 continued

Q6

(Total 9 marks)

DO NOT WRITE IN THIS AREA
DO NOT WRITE IN THIS AREA
DO NOT WRITE IN THIS AREA

Leave blank

7.

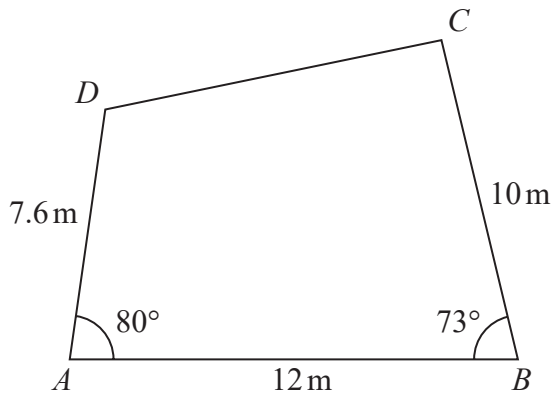

Diagram not drawn to scale

Figure 2

Figure 2 shows a plan of a garden, *ABCD*, in the shape of a quadrilateral.

Given $AB = 12\,\text{m}$, $BC = 10\,\text{m}$, $AD = 7.6\,\text{m}$, angle $ABC = 73°$ and angle $DAB = 80°$

(a) find the length of *BD*, in m, giving your answer to 2 decimal places.

(2)

(b) Find, making your method clear, the area of the garden *ABCD*.
Give your answer to the nearest m^2.

(6)

DO NOT WRITE IN THIS AREA
DO NOT WRITE IN THIS AREA
DO NOT WRITE IN THIS AREA

Leave blank

Question 7 continued

DO NOT WRITE IN THIS AREA
DO NOT WRITE IN THIS AREA
DO NOT WRITE IN THIS AREA

Leave blank

Question 7 continued

DO NOT WRITE IN THIS AREA
DO NOT WRITE IN THIS AREA
DO NOT WRITE IN THIS AREA

Leave blank

Question 7 continued

Q7

(Total 8 marks)

DO NOT WRITE IN THIS AREA
DO NOT WRITE IN THIS AREA
DO NOT WRITE IN THIS AREA

Leave blank

8. The curve C has equation

$$2x^2 + y^2 + 4x - 2y = 3$$

The line l has equation

$$y = 2x + k, \text{ where } k \text{ is a constant}$$

(a) Show that the x coordinates of the points where C and l intersect are given by the solutions to the equation

$$6x^2 + 4kx + k^2 - 2k - 3 = 0$$

(3)

(b) Hence find the two values of k for which l is a tangent to C.

(4)

DO NOT WRITE IN THIS AREA
DO NOT WRITE IN THIS AREA
DO NOT WRITE IN THIS AREA

Leave blank

Question 8 continued

DO NOT WRITE IN THIS AREA
DO NOT WRITE IN THIS AREA
DO NOT WRITE IN THIS AREA

Leave blank

Question 8 continued

DO NOT WRITE IN THIS AREA
DO NOT WRITE IN THIS AREA
DO NOT WRITE IN THIS AREA

Leave blank

Question 8 continued

Q8

(Total 7 marks)

DO NOT WRITE IN THIS AREA
DO NOT WRITE IN THIS AREA
DO NOT WRITE IN THIS AREA

Leave blank

9. Student A is taking part in a sponsored cycle ride.

He plans to cycle 1000 km over a number of days.

On Day One student A cycles 50 km.

He plans to cycle 12 km more each day than he had cycled the previous day.

He will stop cycling when he reaches 1000 km.

(a) Show that student A will finish the ride on Day Ten by cycling 118 km.

(4)

Student B also plans to cycle 1000 km over a number of days.

On Day One she cycles d km.

Student B plans to cycle 2% further each day than she had cycled the previous day.

Given that she will take 8 **complete** days to cycle the 1000 km,

(b) find the value of d, giving your answer to 2 decimal places.

(3)

DO NOT WRITE IN THIS AREA DO NOT WRITE IN THIS AREA DO NOT WRITE IN THIS AREA

Leave blank

Question 9 continued

DO NOT WRITE IN THIS AREA
DO NOT WRITE IN THIS AREA
DO NOT WRITE IN THIS AREA

Leave blank

Question 9 continued

DO NOT WRITE IN THIS AREA
DO NOT WRITE IN THIS AREA
DO NOT WRITE IN THIS AREA

Leave blank

Question 9 continued

Q9

(Total 7 marks)

DO NOT WRITE IN THIS AREA
DO NOT WRITE IN THIS AREA
DO NOT WRITE IN THIS AREA

Leave blank

10. $$f(x) = -2x^3 + 7x^2 + 10x - 24$$

(a) Use the factor theorem to show that $f(x)$ is divisible by $(x + 2)$.

(2)

(b) Hence write $f(x)$ as a product of three linear factors.

(3)

(c) (i) Fully factorise $x^3 - 2x^2 - 8x$

(ii) Hence show that

$$\frac{-2x^3 + 7x^2 + 10x - 24}{x^3 - 2x^2 - 8x}$$

can be written in the form $A + \frac{B}{x}$ where A and B are integers to be found.

(4)

DO NOT WRITE IN THIS AREA
DO NOT WRITE IN THIS AREA
DO NOT WRITE IN THIS AREA

Leave blank

Question 10 continued

Q10

(Total 9 marks)

DO NOT WRITE IN THIS AREA
DO NOT WRITE IN THIS AREA
DO NOT WRITE IN THIS AREA

Leave blank

11.

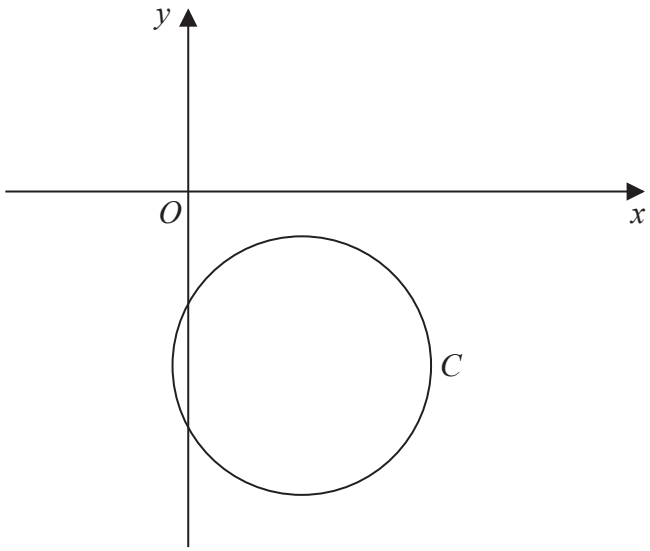

Figure 3

Figure 3 shows a sketch of the circle C with equation

$$x^2 + y^2 - 6x + 9y + 18 = 0$$

(a) Find (i) the coordinates of the centre of C

(ii) the exact value of the radius of C

(3)

Line l is parallel to the y-axis and intersects C at points P and Q.

Given that length PQ is 5

(b) find two distinct equations for l.

(4)

DO NOT WRITE IN THIS AREA
DO NOT WRITE IN THIS AREA
DO NOT WRITE IN THIS AREA

Leave blank

Question 11 continued

Q11

(Total 7 marks)

DO NOT WRITE IN THIS AREA

DO NOT WRITE IN THIS AREA

DO NOT WRITE IN THIS AREA

Leave blank

12. (a) Find the first 3 terms, in ascending powers of x, of the binomial expansion of

$$\left(2 - \frac{x}{8}\right)^7$$

giving each term in its simplest form.

(4)

$$f(x) = (a + bx)\left(2 - \frac{x}{8}\right)^7$$

where a and b are constants.

Given that the first 2 terms, in ascending powers of x, in the series expansion of $f(x)$ are 16 and $249x$,

(b) find the value of a,

(2)

(c) find the value of b.

(2)

DO NOT WRITE IN THIS AREA DO NOT WRITE IN THIS AREA DO NOT WRITE IN THIS AREA

Leave blank

Question 12 continued

Q12

(Total 8 marks)

DO NOT WRITE IN THIS AREA

DO NOT WRITE IN THIS AREA

DO NOT WRITE IN THIS AREA

Leave blank

13. **In this question you must show detailed reasoning.**

Solutions relying on calculator technology are not acceptable.

(i) Find, for $0 < \theta \leqslant \pi$, the exact solutions of the equation

$$\sin\left(2\theta + \frac{3\pi}{8}\right) = \frac{1}{2}$$

(4)

(ii) Solve, for $0 < x \leqslant 360°$, the equation

$$5 \sin x = 4 \tan x$$

giving your answers, where appropriate, to one decimal place.

(5)

DO NOT WRITE IN THIS AREA DO NOT WRITE IN THIS AREA DO NOT WRITE IN THIS AREA

Leave blank

Question 13 continued

DO NOT WRITE IN THIS AREA
DO NOT WRITE IN THIS AREA
DO NOT WRITE IN THIS AREA

Leave blank

Question 13 continued

DO NOT WRITE IN THIS AREA
DO NOT WRITE IN THIS AREA
DO NOT WRITE IN THIS AREA

Leave blank

Question 13 continued

Q13

(Total 9 marks)

DO NOT WRITE IN THIS AREA
DO NOT WRITE IN THIS AREA
DO NOT WRITE IN THIS AREA

Leave blank

14. A curve has equation $y = (x + 2)^2(4 - x)$

The curve touches the x-axis at the point P and crosses the x-axis at the point Q.

(a) State the coordinates of the point Q.

(1)

The finite region R is bounded by the curve and the x-axis.

(b) Using calculus and showing each step of your working, find the exact area of R.

(6)

(c) Using the answer to part (b) and explaining your reasoning, find the area of the finite region bounded by the curve with equation $y = (3x + 6)^2\left(2 - \frac{1}{2}x\right)$ and the x-axis.

(2)

DO NOT WRITE IN THIS AREA
DO NOT WRITE IN THIS AREA
DO NOT WRITE IN THIS AREA

Leave blank

Question 14 continued

DO NOT WRITE IN THIS AREA
DO NOT WRITE IN THIS AREA
DO NOT WRITE IN THIS AREA

Leave blank

Question 14 continued

DO NOT WRITE IN THIS AREA
DO NOT WRITE IN THIS AREA
DO NOT WRITE IN THIS AREA

Leave blank

Question 14 continued

Q14

(Total 9 marks)

DO NOT WRITE IN THIS AREA
DO NOT WRITE IN THIS AREA
DO NOT WRITE IN THIS AREA

Leave blank

15.

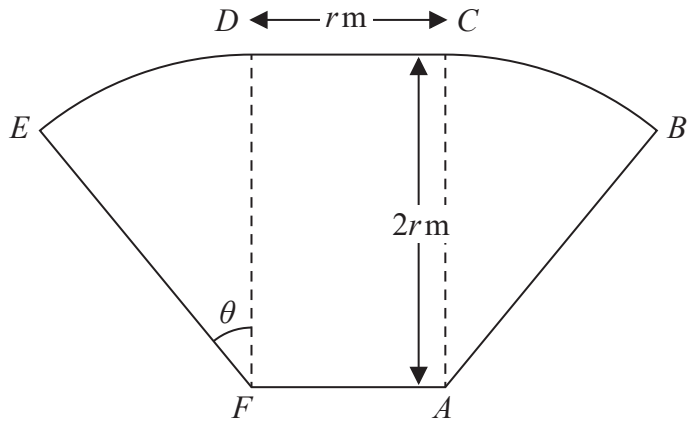

Figure 4

Figure 4 shows the plan view of the design for a stage at a trade fair.

The shape of the stage *ABCDEFA*, consists of a rectangle *ACDF* joined to two congruent sectors of circles. *ABC* is a sector of a circle centre *A* and *FDE* is a sector of a circle centre *F*.

Given that $AC = 2r$ metres, $CD = r$ metres, angle $DFE = \theta$ radians and the area of the stage is $30\,\text{m}^2$,

(a) show that the perimeter, P metres, of the stage, is given by

$$P = 4r + \frac{30}{r}$$

(5)

(b) Use calculus to find the minimum value for P, giving your answer in the form $a\sqrt{b}$, where a and b are integers to be found.

(4)

(c) Justify that the value of P found in part (b) is the minimum.

(2)

DO NOT WRITE IN THIS AREA
DO NOT WRITE IN THIS AREA
DO NOT WRITE IN THIS AREA

Leave blank

Question 15 continued

DO NOT WRITE IN THIS AREA
DO NOT WRITE IN THIS AREA
DO NOT WRITE IN THIS AREA

Leave blank

Question 15 continued

DO NOT WRITE IN THIS AREA
DO NOT WRITE IN THIS AREA
DO NOT WRITE IN THIS AREA

Leave blank

Question 15 continued

(Total 11 marks)

Q15

DO NOT WRITE IN THIS AREA
DO NOT WRITE IN THIS AREA
DO NOT WRITE IN THIS AREA

Leave blank

16. Given the first three terms of a geometric sequence are

$$2\sin\theta,\ 1 + \cos\theta \text{ and } 4\sin\theta$$

(a) show that

$$9\cos^2\theta + 2\cos\theta - 7 = 0$$

(4)

Given that θ is acute,

(b) find the exact value of $\cos\theta$.

(2)

(c) Hence find, in simplest form, the exact value of

(i) the first term of this sequence,

(ii) the common ratio of this sequence.

(5)

DO NOT WRITE IN THIS AREA DO NOT WRITE IN THIS AREA DO NOT WRITE IN THIS AREA

Leave blank

Question 16 continued

DO NOT WRITE IN THIS AREA
DO NOT WRITE IN THIS AREA
DO NOT WRITE IN THIS AREA

Leave blank

Question 16 continued

Q16

(Total 11 marks)

TOTAL FOR PAPER: 125 MARKS

END

DO NOT WRITE IN THIS AREA

DO NOT WRITE IN THIS AREA

DO NOT WRITE IN THIS AREA

P 6 1 1 3 0 A 0 4 8 4 8